FH30-60HZ MULTIMATIC

Product code	IN7JFF327660702
Reactive power Ue=400V	276 kvar
Nominal voltage Ue	400V
Capacitors voltage Un	550 V
Capacitors max voltage Umax	600 V
Frequency	60 Hz
$THDI_R$%	100%
I_{250Hz}%	>25%
$THDV_R$%	≤6%
Detuning frequency f_D	162 Hz
Steps Ue=400V	16-2x33-3x65 kvar
Electrical steps number	17
Banks	33-49-3x65 kvar
Load break switch	630 A
Icc	25 kA
Controller	8BGA
IP degree	IP4X
Dimensions WxDxH	610x670x2160mm
Weight	415 kg

Standard features

Max current overload In	1.3 In
Max current overload In (capacitors)	1,3 In (continuous)
Max overload Vn	1,1xUe
Max overload Vn (capacitors)	3xUn (for 1 minute)
Insulation voltage	690V
Temperature class	-5/+40°C
Temperature class (capacitors)	-25/+55°C
Discharge device	mounted on each bank
Installation	indoor
Service	continuous
Internal connection	delta
Total losses	~ 8W/kvar
Inner surface finish	zinc passivation
Standards (bank)	IEC 61439-1/2, IEC 61921
Standards (capacitors)	IEC 60831-1/2

R1012023

Generalities

Zink-passivated metallic enclosure painted with epossidic dust paint, colour RAL 7035.
Auxiliary transformer to separate power and auxiliary circuit parts (110V).
Load-break switch with door interlock.
Contactors for capacitive loads.
FS17 450/750V self-extinguish cable according to EN 50525 - EN 50575 - EN 50575/A1.
Microprocessor Power Factor Correction relay.
Control and protection multimeter MCP5, integrated in 8BGA controller.
CRM25 single phase self-healing metallized polypropylene capacitor with Un=550V-50Hz (480V-60Hz) rated voltage.
Three phase detuning choke with tuning frequency fD=162Hz (N=2.7-p%=13.7%).

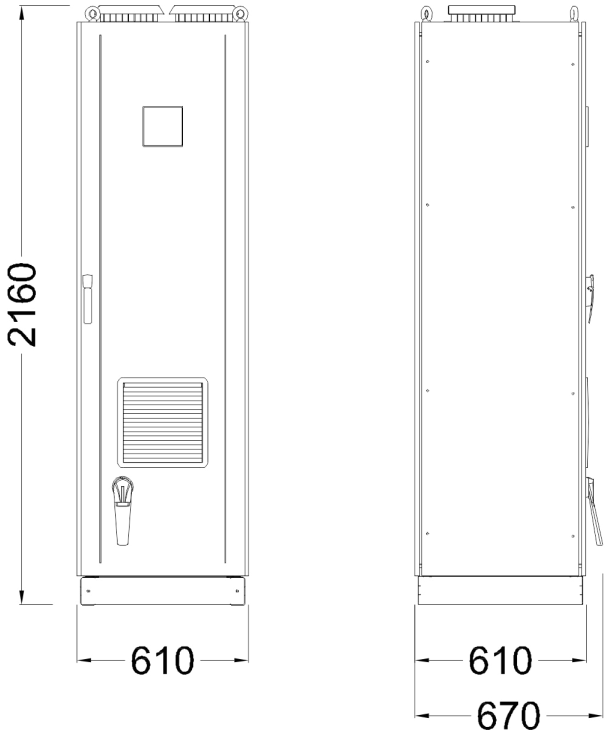

Bottom view ground fixing and cables entry

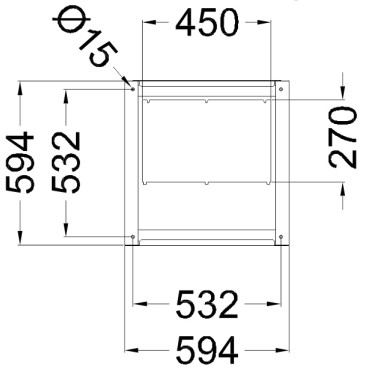
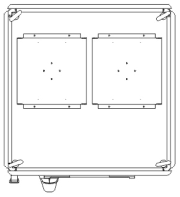
Top view