VP10 MINIMATIC

Product code	IF2VFF237550652
Reactive power Ue=400V	37.5 kvar
Nominal voltage Ue	400V
Capacitors voltage Un	400 V
Capacitors max voltage Umax	440 V
Frequency	50 Hz
$THDI_R$%	≤27%
Steps Ue=400V	7,5-2x15 kvar
Electrical steps number	5
Banks	37.5 kvar
Load break switch	125 A
Icc	9 kA
Controller	5LGA
IP degree	IP3X
Dimensions WxDxH	420x425x745mm
Weight	81 kg

Standard features

Max current overload In	1.3 In
Max current overload In (capacitors)	1,3 In (continuous) 2 In (x500s every 60 minutes) 3 In (x180s every 60 minutes) 4 In (x90s every 60 minutes) 5 In (x50s every 60 minutes)
Max overload Vn	1,1xUe
Max overload Vn (capacitors)	3xUn (for 1 minute)
Insulation voltage	690V
Temperature class	-5/+40°C
Temperature class (capacitors)	-25/+70°C
Discharge device	mounted on each bank
Installation	indoor
Service	continuous
Internal connection	delta
Total losses	~ 2W/kvar
Inner surface finish	zinc passivation
Standards (bank)	IEC 61439-1/2, IEC 61921
Standards (capacitors)	IEC 60831-1/2

Generalities

Zink-passivated metallic enclosure painted with epossidic dust paint, colour RAL 7035.
Auxiliary transformer to separate power and auxiliary circuit parts (110V).
Load-break switch with door interlock.
Special contactors with damping resistors to limit capacitors inrush current (AC6b).
FS17 450/750V self-extinguish cable according to EN 50525 - EN 50575 - EN 50575/A1.
Microprocessor Power Factor Correction relay.
CRM25 single phase self-healing metallized polypropylene capacitor with increased thickness and UN=400V rated voltage.

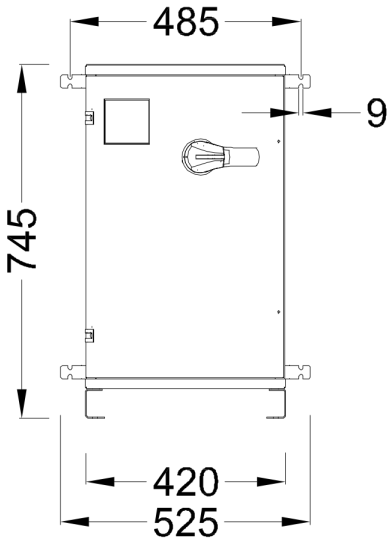

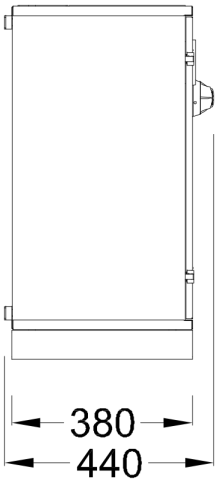

Bottom view
ground fixing

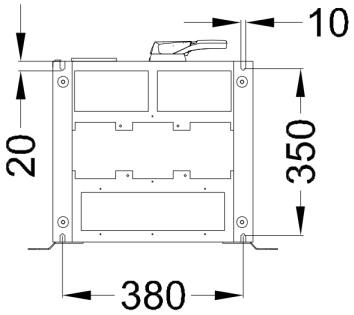
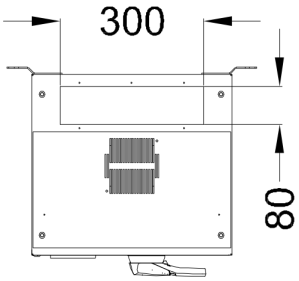
Top view
cables enty