FH30 MULTIMATIC

Product code (Ue=400V)	IN7JFF330050702
Reactive power Ue=400V	300 kvar
Reactive power Ue=415V	321 kvar
Nominal voltage Ue	400-415V
Capacitors voltage Un	550 V
Capacitors max voltage Umax	600 V
Frequency	50 Hz
$THDI_R$%	100%
I_{250Hz}%	>25%
$THDV_R$%	≤6%
Detuning frequency f_D	135 Hz
Steps Ue=400V	20-40-3x80 kvar
Electrical steps number	15
Banks	60-3x80 kvar
Load break switch	800 A
Icc	50 kA
Controller	8BGA
IP degree	IP4X
Dimensions WxDxH	610x670x1960mm
Weight	385 kg

Standard features

Max current overload In (bank)	1.3 In
Max current overload In (capacitors)	1,3 In (continuous) 2 In (x380s every 60 minutes) 3 In (x150s every 60 minutes) 4 In (x70s every 60 minutes) 5 In (x45s every 60 minutes)
Max overload Vn (bank)	1,1xUe
Max overload Vn (capacitors)	3xUn (for 1 minute)
Insulation voltage	690V
Temperature class (bank)	-5/+40°C
Temperature class (capacitors)	-25/+55°C
Discharge device	mounted on each bank
Installation	indoor
Service	continuous
Internal connection	delta
Total losses	~ 8W/kvar
Inner surface finish	zinc passivation
Standards (bank)	IEC 61439-1/2, IEC 61921
Standards (capacitors)	IEC 60831-1/2

R282022

Generalities

Zink-passivated metallic enclosure painted with epossidic dust paint, colour RAL 7035.
Auxiliary transformer to separate power and auxiliary circuit parts (110V).
Load-break switch with door interlock.
Contactors for capacitive loads.
FS17 450/750V self-extinguish cable according to EN 50525 - EN 50575 - EN 50575/A1.
Microprocessor Power Factor Correction relay.
Control and protection multimeter MCP5, integrated in 8BGA controller (MULTImatic version).
CRM25 single phase self-healing metallized polypropylene capacitor with Un=550V rated voltage.
Three phase detuning choke with tuning frequency fD=135Hz (N=2.7-p%=13.7%).

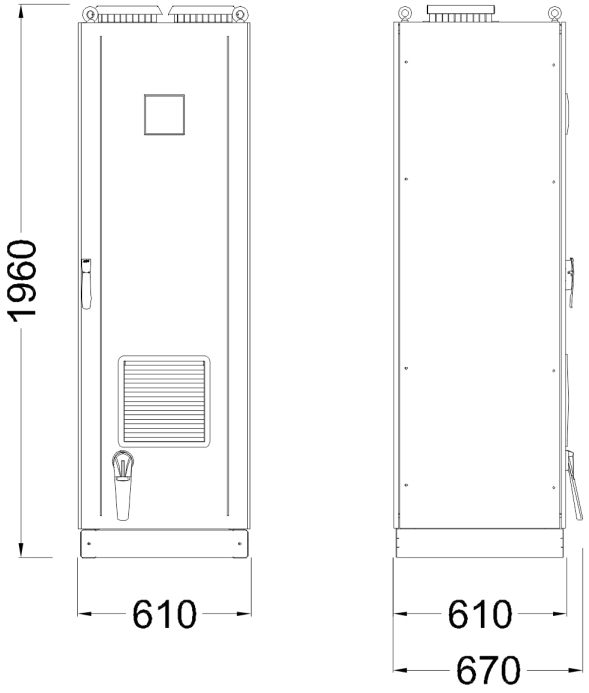

Bottom view ground fixing and cables entry

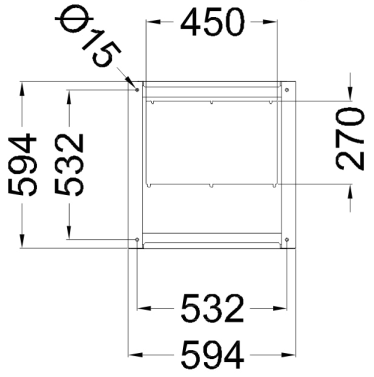
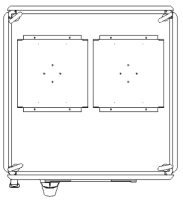
Top view