# FH30 MULTIMATIC IP55

| | |
|---|---|
| **Product code** | IP7JFF334050702 |
| **Reactive power Ue=400V** | 340 kvar |
| **Reactive power Ue=415V** | 364 kvar |
| **Nominal voltage Ue** | 400-415V |
| **Capacitors voltage Un** | 550 V |
| **Capacitors max voltage Umax** | 600 V |
| **Frequency** | 50 Hz |
| **$THDI_R$%** | 100% |
| **$I_{250Hz}$%** | >25% |
| **$THDV_R$%** | ≤6% |
| **Detuning frequency $f_D$** | 135 Hz |
| **Steps Ue=400V** | 20-2x40-3x80 kvar |
| **Electrical steps number** | 17 |
| **Banks** | 40-60-3x80 kvar |
| **Load break switch** | 800 A |
| **Icc** | 50 kA |
| **Controller** | 8BGA |
| **IP degree** | IP55 |
| **Dimensions WxDxH** | 822x670x2160mm |
| **Weight** | 415 kg |

## Standard features

| | |
|---|---|
| **Max current overload In** | 1.3 In |
| **Max current overload In (capacitors)** | 1,3 In (continuous)<br>2 In (x380s every 60 minutes)<br>3 In (x150s every 60 minutes)<br>4 In (x70s every 60 minutes)<br>5 In (x45s every 60 minutes) |
| **Max overload Vn** | 1,1xUe |
| **Max overload Vn (capacitors)** | 3xUn (for 1 minute) |
| **Insulation voltage** | 690V |
| **Temperature class** | -5/+40°C |
| **Temperature class (capacitors)** | -25/+55°C |
| **Discharge device** | mounted on each bank |
| **Installation** | indoor |
| **Service** | continuous |
| **Internal connection** | delta |
| **Total losses** | ~ 8W/kvar |
| **Inner surface finish** | zinc passivation |
| **Standards (bank)** | IEC 61439-1/2, IEC 61921 |
| **Standards (capacitors)** | IEC 60831-1/2 |

R3092022

## Generalities

| |
|---|
| Zink-passivated metallic enclosure painted with epossidic dust paint, colour RAL 7035. |
| Auxiliary transformer to separate power and auxiliary circuit parts (110V). |
| Load-break switch with door interlock. |
| Contactors for capacitive loads. |
| FS17 450/750V self-extinguish cable according to EN 50525 - EN 50575 - EN 50575/A1. |
| Microprocessor Power Factor Correction relay. |
| Control and protection multimeter MCP5, integrated in 8BGA controller (MULTImatic version). |
| CRM25 single phase self-healing metallized polypropylene capacitor with Un=550V rated voltage. |
| Three phase detuning choke with tuning frequency fD=135Hz (N=2.7-p%=13.7%). |

Min. distance from the wall: 250mm

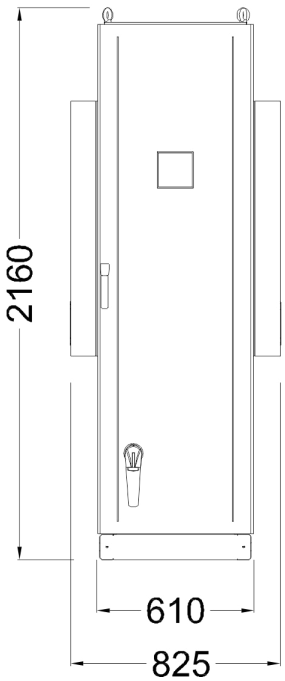


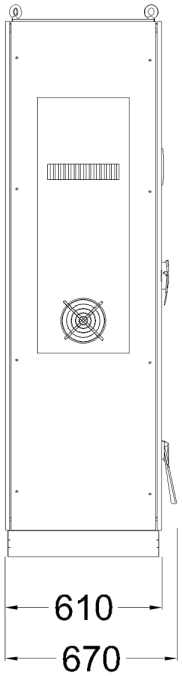


Bottom view ground fixing and cables entry

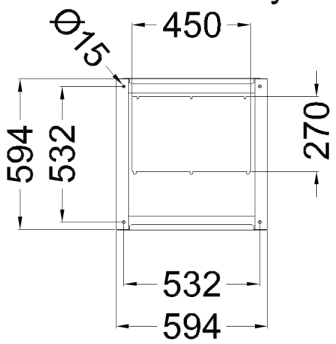

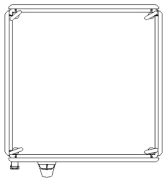
Top view