FH20-60HZ-400V MULTIMATIC

Product code	IN7AFF360060701
Reactive power Ue=400V	600 kvar
Nominal voltage Ue	400V
Capacitors voltage Un	550 V
Capacitors max voltage Umax	600 V
Frequency	60 Hz
$THDI_R$%	100%
I_{250Hz}%	≤25%
$THDV_R$%	≤6%
Detuning frequency f_D	216 Hz
Steps Ue=400V	2x60-4x120 kvar
Electrical steps number	10
Banks	120 kvar
Load break switch	2x800 A
Icc	50 kA
Controller	8BGA
IP degree	IP4X
Dimensions WxDxH	1220x670x2160mm
Weight	980 kg

Standard features

Max current overload In	1.3 In
Max current overload In (capacitors)	1,3 In (continuous)
Max overload Vn	1,1xUe
Max overload Vn (capacitors)	3xUn (for 1 minute)
Insulation voltage	690V
Temperature class	-5/+40°C
Temperature class (capacitors)	-25/+55°C
Discharge device	mounted on each bank
Installation	indoor
Service	continuous
Internal connection	delta
Total losses	~ 6W/kvar
Inner surface finish	zinc passivation
Standards (bank)	IEC 61439-1/2, IEC 61921
Standards (capacitors)	IEC 60831-1/2

Generalities

Zink-passivated metallic enclosure painted with epossidic dust paint, colour RAL 7035.
Auxiliary transformer to separate power and auxiliary circuit parts (110V).
Load-break switch with door interlock.
Contactors for capacitive loads.
FS17 450/750V self-extinguish cable according to EN 50525 - EN 50575 - EN 50575/A1.
Microprocessor Power Factor Correction relay.
Control and protection multimeter MCP5, integrated in 8BGA controller.
CRM25 single phase self-healing metallized polypropylene capacitor with Un=415V-50Hz (350V60Hz) rated voltage.
Three phase detuning choke with tuning frequency fD=216Hz (N=3.6-p%=7.7%).

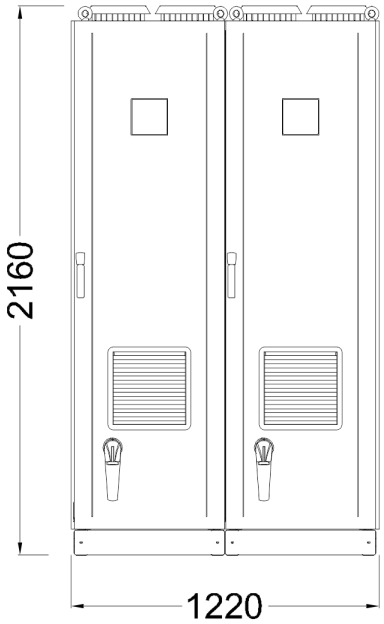

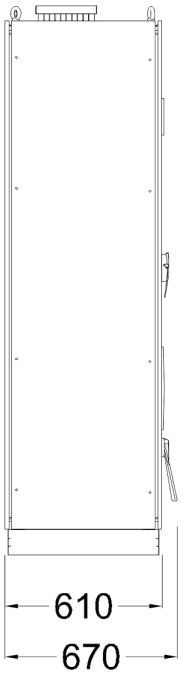

Bottom view ground fixing and cables entry

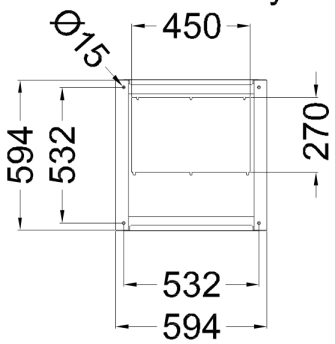
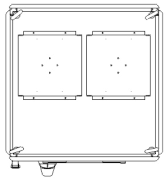
Top view