FV25 MULTIMATIC

Product code	IN5VFF317550701
Reactive power Ue=400V	175 kvar
Nominal voltage Ue	400V
Capacitors voltage Un	460 V
Capacitors max voltage Umax	500 V
Frequency	50 Hz
$THDI_R$%	100%
I_{250Hz}%	≤25%
$THDV_R$%	≤6%
Detuning frequency f_D	180 Hz
Steps Ue=400V	25-3x50 kvar
Electrical steps number	7
Banks	25-3x50 kvar
Load break switch	400 A
Icc	25 kA
Controller	8BGA
IP degree	IP4X
Dimensions WxDxH	610x670x1960mm
Weight	380 kg

Standard features

Max current overload In	1.3 In
Max current overload In (capacitors)	1,3 In (continuous) 2 In (x500s every 60 minutes) 3 In (x180s every 60 minutes) 4 In (x90s every 60 minutes) 5 In (x50s every 60 minutes)
Max overload Vn	1,1xUe
Max overload Vn (capacitors)	3xUn (for 1 minute)
Insulation voltage	690V
Temperature class	-5/+40°C
Temperature class (capacitors)	-25/+70°C
Discharge device	mounted on each bank
Installation	indoor
Service	continuous
Internal connection	delta
Total losses	~ 6W/kvar
Inner surface finish	zinc passivation
Standards (bank)	IEC 61439-1/2, IEC 61921
Standards (capacitors)	IEC 60831-1/2

Generalities

Zink-passivated metallic enclosure painted with epossidic dust paint, colour RAL 7035.
Auxiliary transformer to separate power and auxiliary circuit parts (110V).
Load-break switch with door interlock.
Contactors for capacitive loads.
FS17 450/750V self-extinguish cable according to EN 50525 - EN 50575 - EN 50575/A1.
Microprocessor Power Factor Correction relay.
Control and protection multimeter MCP5, integrated in 8BGA controller.
CRM25 single phase self-healing metallized polypropylene capacitor with increased thickness and Un=460V rated voltage.
Three phase detuning choke with tuning frequency fD=180Hz (N=3.6-p%=7.7%).

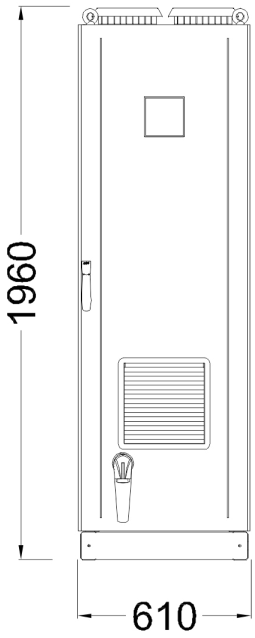

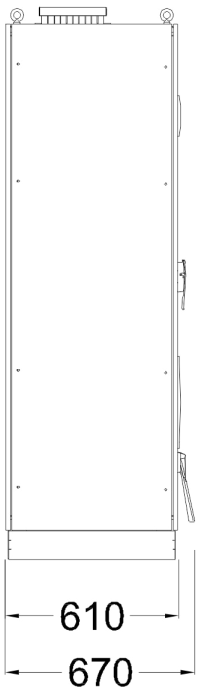

Bottom view
ground fixing and
cables entry

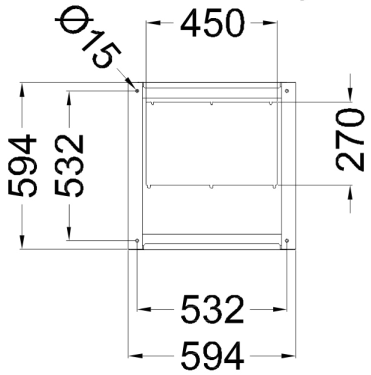

Top view

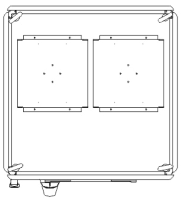

R3092022