FH20-60HZ-400V MIDIMATIC

Product code (Ue=400V)	IL4FFF313560892
Reactive power Ue=400V	135 kvar
Nominal voltage Ue	400V
Capacitors voltage Un	550 V
Capacitors max voltage Umax	600 V
Frequency	60 Hz
$THDI_R$%	100%
I_{250Hz}%	≤25%
$THDV_R$%	≤6%
Detuning frequency f_D	216 Hz
Steps Ue=400V	15-2x30-60 kvar
Electrical steps number	9
Banks	30-45-60 kvar
Load break switch	400 A
Icc	20 kA
Controller	8BGA
IP degree	IP3X
Dimensions WxDxH	600x690x1835mm
Weight	285 kg

Standard features

Max current overload In (bank)	1.3 In
Max current overload In (capacitors)	1,3 In (continuous)
Max overload Vn (bank)	1,1xUe
Max overload Vn (capacitors)	3xUn (for 1 minute)
Insulation voltage	690V
Temperature class (bank)	-5/+40°C
Temperature class (capacitors)	-25/+55°C
Discharge device	mounted on each bank
Installation	indoor
Service	continuous
Internal connection	delta
Total losses	~ 6W/kvar
Inner surface finish	zinc passivation
Standards (bank)	IEC 61439-1/2, IEC 61921
Standards (capacitors)	IEC 60831-1/2

Generalities

Zink-passivated metallic enclosure painted with epossidic dust paint, colour RAL 7035.
Auxiliary transformer to separate power and auxiliary circuit parts (110V).
Load-break switch with door interlock.
Contactors for capacitive loads.
FS17 450/750V self-extinguish cable according to EN 50525 - EN 50575 - EN 50575/A1.
Microprocessor Power Factor Correction relay.
Control and protection multimeter MCP5, integrated in 8BGA controller.
CRM25 single phase self-healing metallized polypropylene capacitor with Un=550V-50Hz (480V-60Hz) rated voltage.
Three phase detuning choke with tuning frequency fD=216Hz (N=3.6-p%=7.7%).

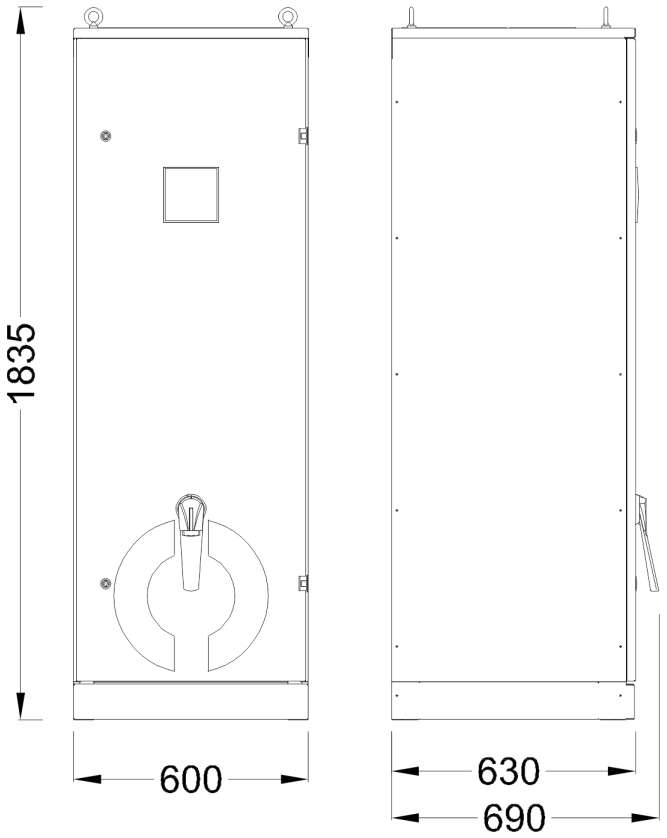

Bottom view ground fixing and cables enty

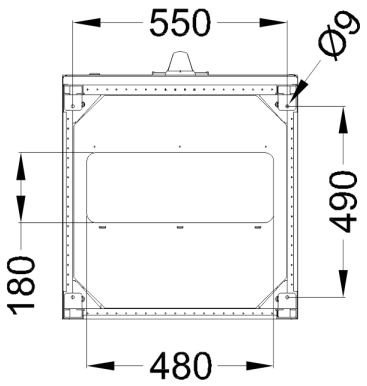

R282022